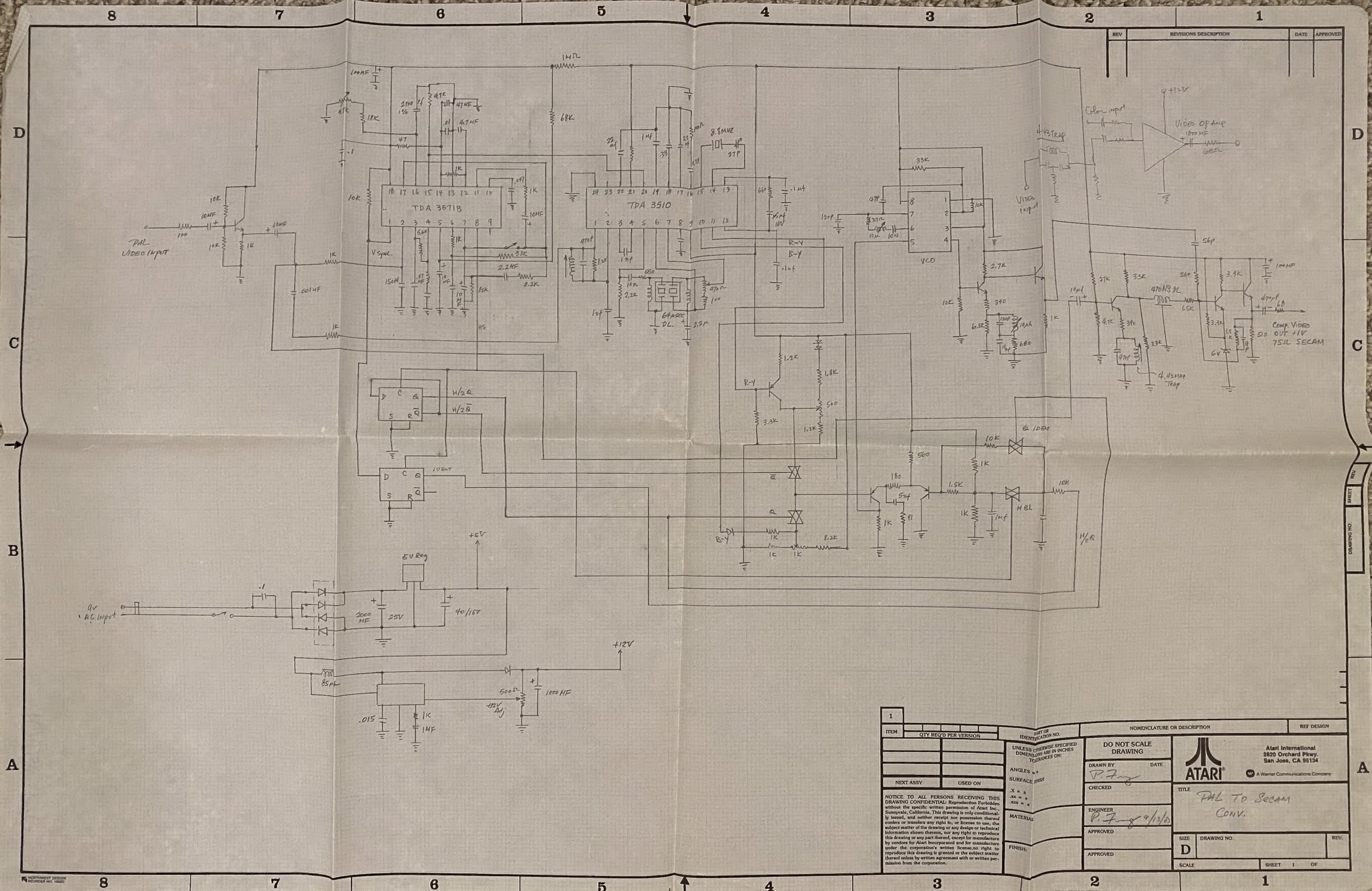

REV	REVISIONS DESCRIPTION	DATE	APPROVED

ITEM	QTY REQ'D PER VERSION	PART OR IDENTIFICATION NO.	NOMENCLATURE OR DESCRIPTION	REF DESIGN
1				

NEXT ASSY	USED ON

NOTICE TO ALL PERSONS RECEIVING THIS DRAWING CONFIDENTIAL: Reproduction Forbidden without the specific written permission of Atari Inc., Sunnyvale, California. This drawing is only conditionally issued, and neither receipt nor possession thereof confers or transfers any right in, or license to use, the subject matter of the drawing or any design or technical information shown thereon, nor any right to reproduce this drawing or any part thereof, except for manufacture by vendors for Atari Incorporated and for manufacture under the corporation's written license, no right to reproduce this drawing is granted or the subject matter thereof unless by written agreement with or written permission from the corporation.

UNLESS OTHERWISE SPECIFIED DIMENSIONS ARE IN INCHES TOLERANCES ON:
ANGLES ± ±
SURFACE FINISH
.X ± ±
.XX ± ±
.XXX ± ±
MATERIAL
FINISH:

DO NOT SCALE DRAWING

DRAWN BY P. Fry DATE
CHECKED
ENGINEER P. Fry 9/13/83
APPROVED
APPROVED

ATARI®
Atari International
2820 Orchard Pkwy.
San Jose, CA 95134
A Warner Communications Company

TITLE PAL TO SECAM CONV.

SIZE D DRAWING NO. REV.
SCALE SHEET 1 OF

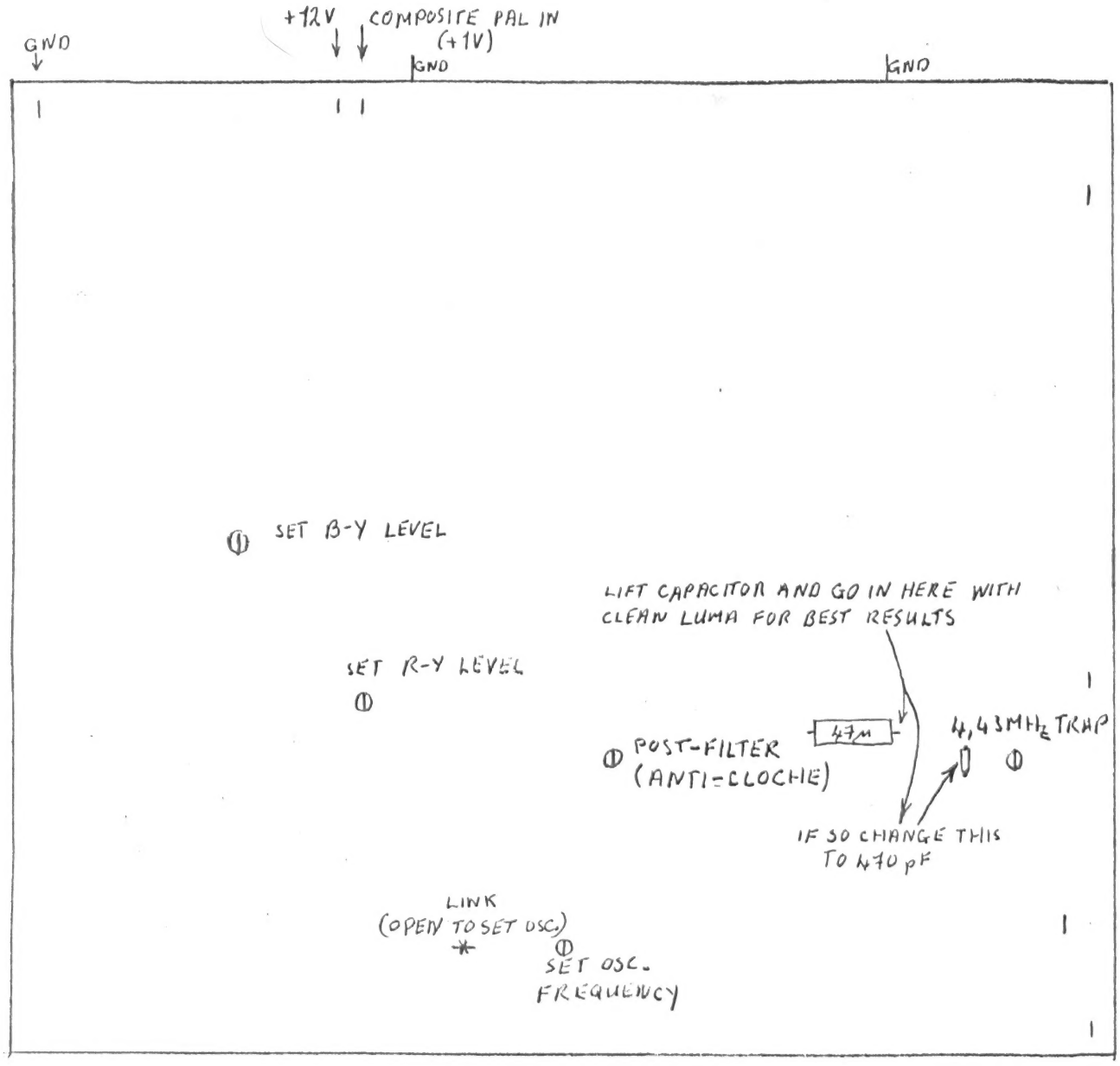

ATARI PAL→SECAM BOARD.

10/82.

NOTES ON ATARI SECAM CONVERTER

1 Setting Up.

1.11 Disconnect interface cct. from MC 1376 pin 5

1.12 With pin 5 of MC 1376 open, tune inductor for an oscillator frequency of 4,400 MHz.

1.13 Reconnect interface to pin 5.

1.21 Observe waveform at MC 1376 pin 5 with calibrated oscilloscope.

1.22 Ground TDA 3333 pin 17 to kill demodulator

1.23 Adjust B-Y potentiometer for 2,70V on B-Y lines

1.24 Adjust R-Y potentiometer for 3,25V on R-Y lines

} At +12·00V supply.

1.31 Adjust Post-filter inductor for centre freqn of 4,286 MHz.
A possible quick method is:

1.311 adjust for minimum unmodulated subcarrier on B-Y lines.

1.312 reduce inductance so that R-Y subcarrier is reduced until a just noticeable rise in B-Y amplitude is obtained

1.32 This adjustment is fairly critical for transient response.
The above quick method appears adequate but is necessarily imperfect. There is no straight forward method of getting it right except to optimise the transient response of a reference receiver which has been previously set up using a standard signal generator.

1.41 Observe waveform at collector of LUMA processing input transistor.

1.42 Adjust trap for minimum subcarrier.

2 Remarks

2.1 Supply Voltage.

The choice of +12V is determined by a) TDA3333

b) MC1376 - frequency range is otherwise inadequate and at +5V the modulation characteristic shows a slope reversal.

c) Simplification of interface.

2.2 Temperature Effects

The interface circuit is designed to minimise temperature coefficients, hence the inclusion of three diodes.

2.3 Modulation Errors.

The most marked error is an H/2 component in the PAL signal provided by ATARI. The colour in Secam therefore depends on the relative phase of the H/2 control signals in the TDA3333 and the re-modulator. As a consequence switching off and on again can change the colour. This can be eliminated by adding a PAL delay line to the TDA3333 to average over two lines.

2.4 Beats

Feeding PAL composite video to the LUMA processor results in beats between PAL and SECAM subcarriers. A 270p trap tuning is essential even to obtain results of doubtful acceptability. This cuts LUMA bandwidth. There remains a certain amount of SECAM noise ("fishes") due to coexistence of the discriminator by residues of PAL transients, also beating. The best approach is to feed clean LUMA and use 470pF trap tuning for safety.

2.5 Subcarrier blanking.

As shown the system does not blank subcarrier during syncs. If this proves a problem, the pulse processor makes available Hsync and Vsync for this purpose.

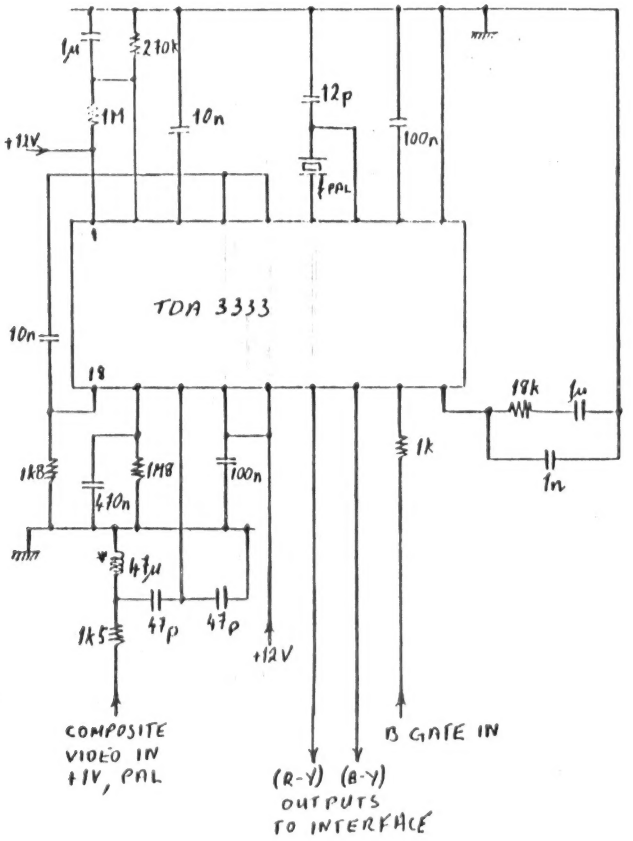

* FIXED INDUCTOR e.g. 'MINICHOKE'

ATARI SECAM CONVERTER, PAL DEMODULATOR

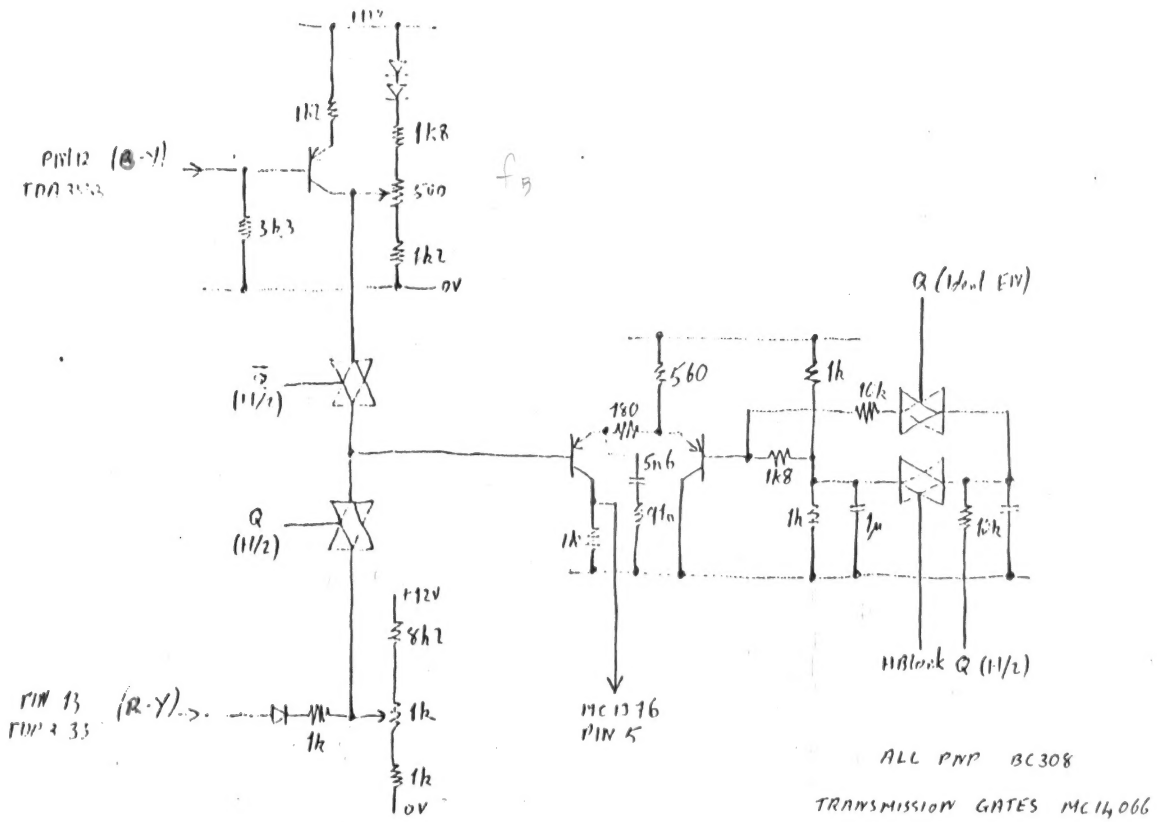

MIDI SECAM MODULATOR, INTERFACE CCT.

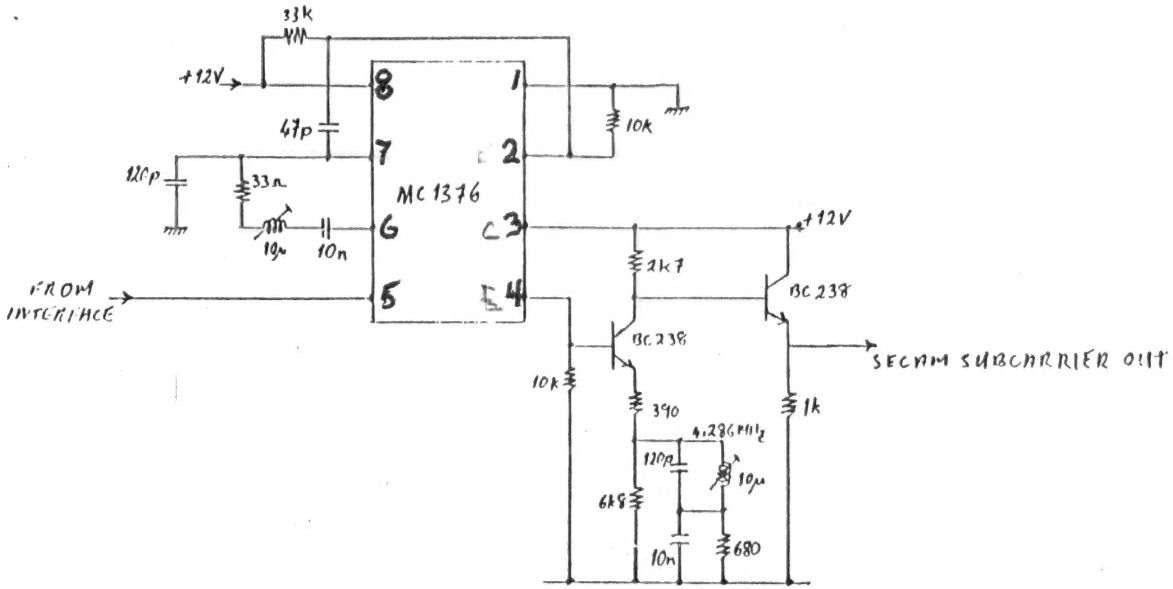

ATARI SECAM CONVERTER, MODULATOR AND POST-FILTER

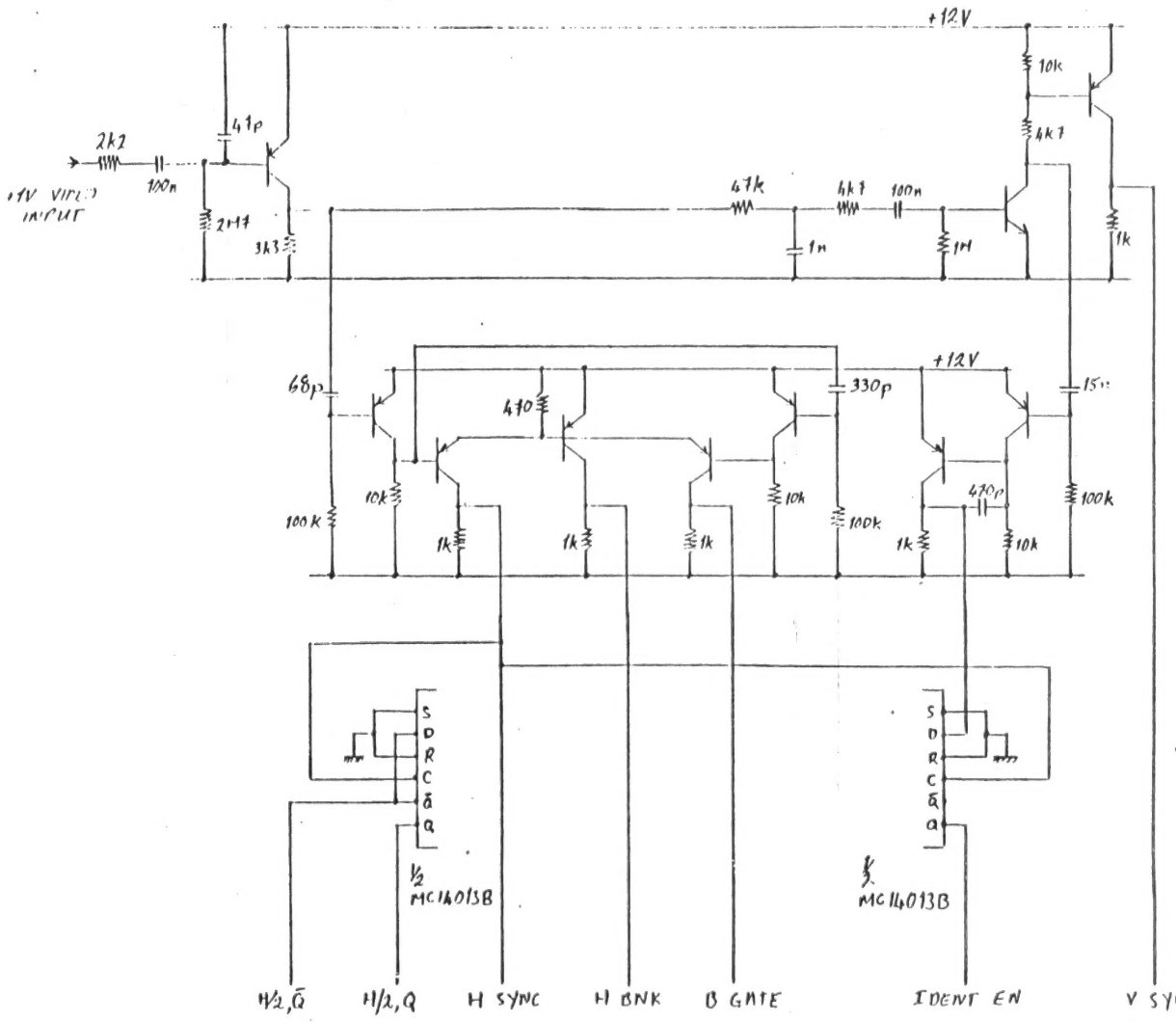

ATARI SECAM CONVERTER, PULSE PROCESSOR

ALL PNP BC308

ALL NPN BC238

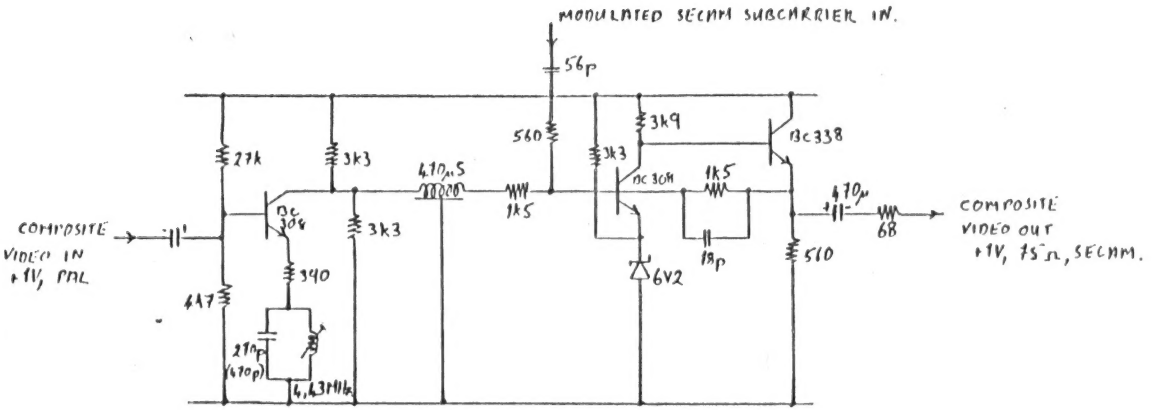

ATARI SECAM CONVERTER, LUMA PROCESSING.

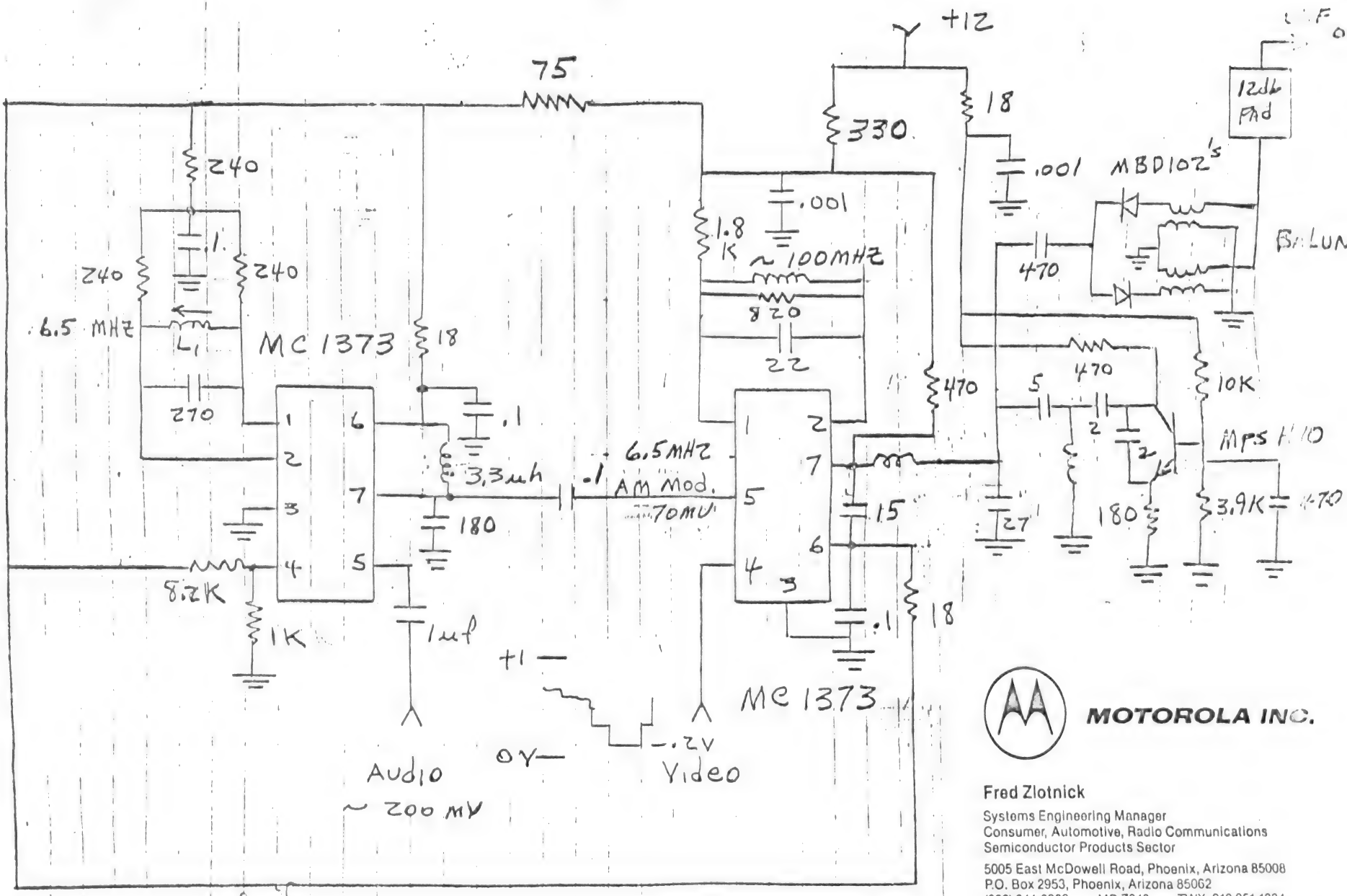

MOTOROLA INC.

Fred Zlotnick

Systems Engineering Manager
Consumer, Automotive, Radio Communications
Semiconductor Products Sector

5005 East McDowell Road, Phoenix, Arizona 85008
P.O. Box 2953, Phoenix, Arizona 85062
(602) 244-6939 MD Z343 TWX: 910-951-1334

Eric! call if
Please have
your any problems

SECAM ATARI UHF MODULATOR

B.H. 10-21-82

YUETTE PARTS LIST

14-5330	1	33Ω	R48
14-5473	1	RESISTOR, 47Ω, 1/4W, 5%	R10
14-5680 14-5820	1 <1	68Ω	R68 <R14
14-5910	1	91Ω <82Ω	R41
14-5101	4	100Ω	R1, 20, 23, 29
14-5181	1	180Ω	R40
14-5391	2	390Ω	R53, 60
14-5511	2	510Ω	R67, 71
14-5561	3	560Ω	R26, 42, 63
14-5681	2	680Ω	R24, 55
14-5702	14	1kΩ	R4-6, 12, 15, 19, 35, 36, 39, 45, 46, 56, 69, 22
14-5122	3	1.2kΩ	R25, 31, 34
14-5152	3	1.5kΩ	R43, 62, 66
14-5182	1	1.8kΩ	R32
14-5222	2	2.2kΩ	R18, 27
14-5272	1	2.7kΩ	R52
14-5332	4	3.3kΩ	R30, 59, 61, 65
14-5392	1	3.9kΩ	R64
14-5472	2	4.7kΩ	R11, 58
14-5562	1	5.6kΩ	R13
14-5682	1	6.8kΩ	R54
14-5822	1	8.2kΩ	R38
14-5103	7	10kΩ	R2, 3, 7, 44, 47, 50, 51
14-5183	1	18kΩ	R9
14-5273	1	27kΩ	R57
14-5333	2	33kΩ	R17, 49
14-5683	1	68kΩ	R21
14-5823	1	82kΩ	R16

C017949-01	3 x6	POTENTIOMETER, 500Ω	R28, 33, 70
"	1	1kΩ	R37
"	1 x12 (10K)	5kΩ	R8

YUETTE PARTS LIST

P/N	QTY.	ITEM	REF. DESIG.
C014179-13	2	CAPACITOR, CERAMIC AXIAL, .001µf, 25V	C9, 34
C014179-02	5	.01µf	C14, 21, 36, 44, 46
C014179-14	7	.1µf	C1, 10, 31, 33, C02, C04, C07
~~C014179-15~~			
~~C014179-09~~	1	18pf, X7R	C50
~~C014179-16~~	1	47pf	C43
C014181-01	1	56pf	C49
C014181-02	2	120pf	C42, 45
C014181-03	1	150pf	C17
	2	470pf	C48, 53

21-101272 ~~C017697~~	1	CAP, MICA RADIAL, .0027µf, 1%	C12
~~TBD~~ C017697	1	CAP, MYLAR RADIAL, .015µf	C4
TBD	1	" .047µf	C16
~~21-101474K27~~ TBD	2	" .33µf	C27, 29
~~C014773~~ 21-101474K27		.47µf	C18

C014773	5	CAP, ELECTROLYTIC, 1µf	C5, 26, 37, 40, 41
TBD	3	2.2µf	C23, 28, 38
C010336	2	4.7µf	C15, 34, 35
C014392	7	10µf	C6-8, 20, 22, 24, 47
TBD	1	15µf 16v	C32
C014393	1	22µf	C25
24-100476	3	47µf 15v	C3, 10, 19
C010340	2	100µf	C11, 51
C014370	1	470µf	C52
C015518	1	1000µf	C54
C014373	1	2000µf 25v	C2

C016547	1	CAP, CERAMIC VARIABLE, 15-50pf	C30

YUETTE PARTS LIST

INDUCTORS

C01O823	2	3 μH VARIABLE	L1,6
"	2	10 μH VARIABLE	L4,5
"	1	1.8 μH "	L9
TBD	2	10 μH "	L2,3
	1	140 μsec DELAY	L7
C017948-041	1	85 μH	L8

DIODES

31-IN4002	5	IN4005	CR1-5
31-IN914	1	IN914	CR6,8,9
C014808-01	1	6.2v ZENER IN5234B	CR7
C014776	1	L.E.D.	CR10

TRANSISTORS

34-2N3904	6	2N3904	Q1-6
33-2N3906	3	2N3906	Q7-9

CRYSTALS

TBD	1	8.8 MHz	Y1
TBD	1	64 μSec DELAY	Y2

I.C.'s

TBD	1	TDA3571B	U1
TBD	1	TDA3510	U3
C014334	1	4013B	U2
TBD	1	MC1376 (VCO)	U4
	1	12V SW. REG. LAS8302	U5
C010819	1	78M05 (5V REGULATOR)	U6
C0114464-011		4066B	U7
C014386-01	1	8-PIN DIP SOCKET	XU4
C014386-02	3	14-PIN " "	XU2,5,7
C014386-04	1	18-PIN	XU1
C014386-07	1	24-PIN	XU3

YUETTE PARTS LIST

INDUCTORS

2	x4	3 μH VARIACLE ✓	L1, 6
2	x4	10 μH VARIACLE ✓	L4, 5
1		1.0 μH ✓	L9
2		10 μH " ✓	L2, 3
1		μsec DELAY ✓	L7
1		85 μH ✓	L8

DIODES

5	x8 IN4005 ✓	CR1-5
3	IN914 ✓	CR6, 8, 9
1	x4 6.2v ZENER IN5234B ✓	[illegible]
1	x6 L.E.D. ✓	[illegible]

TRANSISTORS

✓6	2N3904	Q1-6
✓3	2N3906	Q7-9

CRYSTALS

✓1	x6 8.8 MHz	Y1
✓1	x6 64 μsec DELAY	Y2

5

I.C.'s

1		✓TDA3571B	U1
1		✓TDA3510	U3
1	x9	✓4013B	U2
1		✓MC1376 (VCO)	U4
1		✓[illegible] LA5830Z	U5
1	x9	✓78M05 (5V REGULATOR)	U6
1	x9	✓4066B	U7
1	x6	✓8-PIN DIP SOCKET	XU4
3	x6	✓14-PIN " "	XU2, 5, 7
1	x6	✓18-PIN	XU1
1	x6	✓24-PIN	XU3

1	33Ω	R48
1	RESISTOR, 47Ω, 1/4W, 5%	R10
1	68Ω	R68
1 <1	91Ω <82Ω	R41 <R14
4	[illegible]	[illegible]
1	120Ω	R45
2	330Ω	R58, 60
2	510Ω	R67, 71
3	560Ω	R26, 42, 63
2	620Ω	R24, 55
14	1kΩ	R4-6, 12, 15, 19, 35, 3[illegible] 38, 45, 46, 56, 69, 72
3	1.2kΩ	R25, 31, 34
3	1.5kΩ	R43, 62, 66
1	1.8kΩ	R32
[illegible]	[illegible]	[illegible]
[illegible]	[illegible]	R52
4	3.3kΩ	R39, 59, 61, 65
1	3.9kΩ	R64
2	4.7kΩ	R11, 58
1	5.1kΩ	R13
1	6.8kΩ	R14
1	8.2kΩ	R22
7	[illegible]	[illegible] 44, [illegible]
1	18kΩ	R4
1	22kΩ	R57
2	33kΩ	[illegible]
1	68kΩ	R21
1	82kΩ	R16

3	[illegible]	[illegible]	[illegible]
1		√1kΩ	R37
1	*12 (10K)	√5kΩ	R8

YUETTE PARTS LIST PAL/SECAM CONVERTER - YUETTE

P/N	QTY.	ITEM	REF. DESIG.
	2	CAPACITOR, CERAMIC AXIAL, .001 µf, Z5U	C9, 34
	5	.01 µf	C14, 21, 36, 44, 46
	7 x6	.1 µf	C1, 10, 31, 33, C02, C04, C06
	1	18 pf NPO	C50
	1	47 pf	C43
	1	56 pf	C49
	2	120 pf	C42, 45
	1	150 pf	C17
	2	470 pf	C48, 53
	1 x7	CAP, MICA RADIAL, .0027 µf, 1%	C12
	1	CAP, MYLAR (RADIAL) .015 µf	C4
	1	" .047 µf	C16
	2	" .33 µf	C27, 29
	1	.47 µf	C18
x10	5 x10	CAP, ELECTROLYTIC 1 µf	C5, 26, 37, 40,
	3	2.2 µf	C23, 28, 38
	2	4.7 µf	C15, 39, 35
	7	10 µf	C6-8, 20, 22, 24, 47
	1	15 µf 16v	C32
	1 x6	22 µf	C25
	3 x6 x4	1 µf 50v	3, 19
	2 x8	[illegible]	51
	1 x12	470 µf	[illegible]
	1 x16	1000 µf	C54
	1	2000 µf 25v	C2
	1 x7	CAP, CERAMIC VARIABLE 15-50 pf	C30

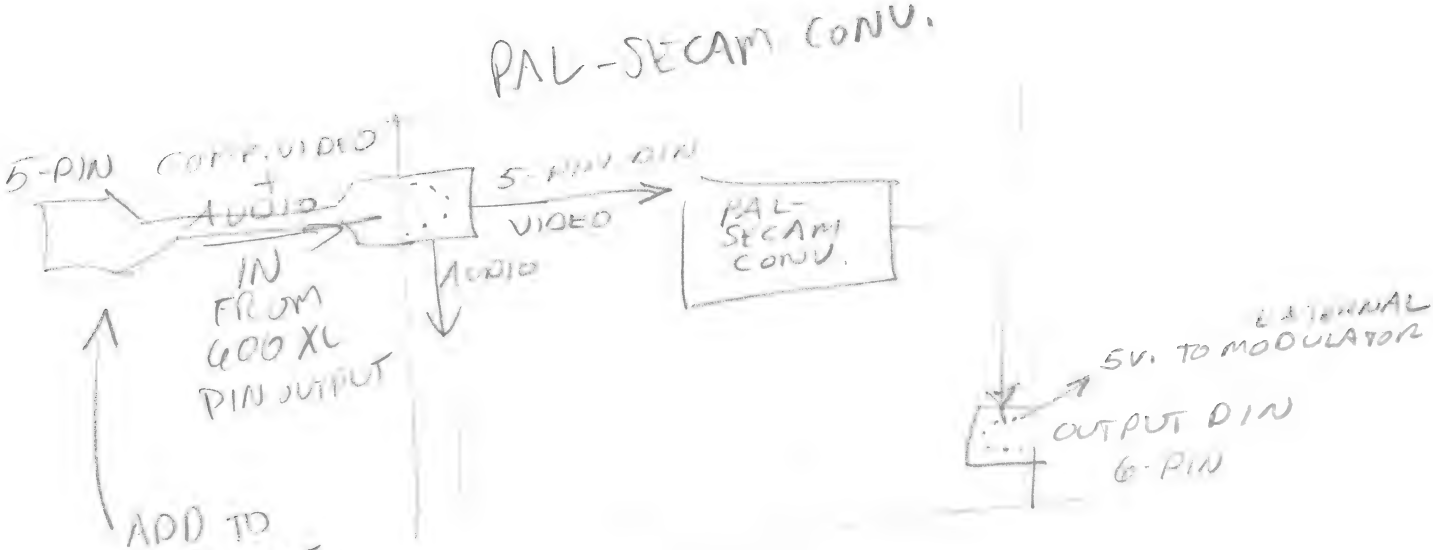

ADD TO PARTS LIST, ALSO NEED A VAC PWR. ADAPTER

LAMBDA SEMICONDUCTORS

Mr. Paul Fung
Consulting Engineer
Atari Inc.
2820 Orchard Pk.
San Jose, CA. 95134

Dear Paul,

Enclosed are Lambda PM83 switching regulators configured for your application. In the rush to get this product assembled a bonding error was made such that the frequency compensation pin(CMP) was not bonded to the package(another device pad was substituted). By changing loop frequency compensation we were able to approximate the preformance of the first prototype board. The difference you will measure at the V_{out}(+12) terminal is 5mv more RMS noise. However, the primary purpose of this test run was verification of 14 pin 'Bat-Wing' package power dissipation capibility. The test board we constructed achieved 27 °C/WATT temperature rise(mounted on a 2" X 2" copper board). Since your application requires .8 Watt device power dissipation no thermal problems will be encountered when the device is mounted as shown on the test board ie. all GND pins connected to a 4 sq. inch thermal radiating area.

I have also enclosed a schematic that details the circuit modifications.

We feel that the Lambda PM83 type switching regulator will meet your application's requirements in a low cost, machine insertable package.

If you have any questions please call me.

Regards,

Paul Tomlinson

Design Engr. Mgr.

STEP-UP CONVERTER

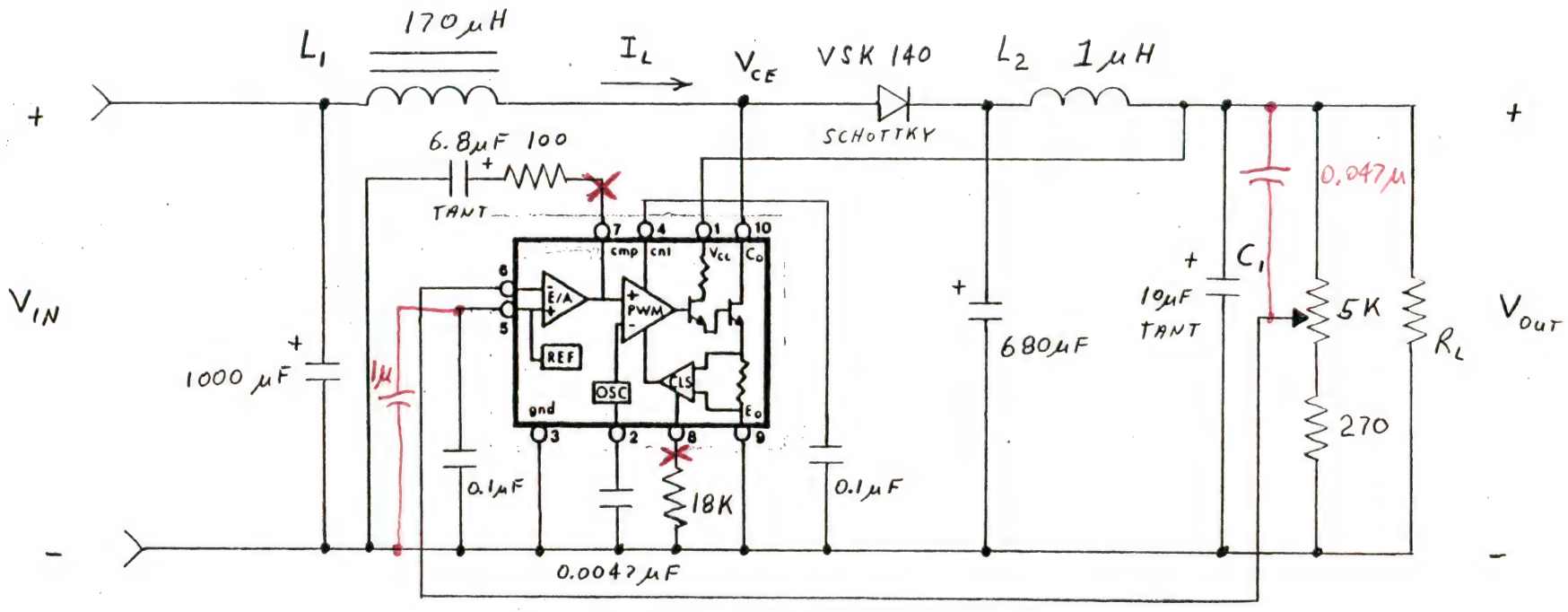

L_1 – 60 turns #24 magnet wire on Micrometals E75-26 "E" core (iron powdered)

L_2 – 10 turns #18 magnet wire on 0.6 cm air core

L_2-C_1 — Optional filter reduces inductive voltage spikes from 1 V peak to peak to 0.08 V peak to peak.

6-3-83

D. Skelton

STEP-UP CONVERTER

L_1 — 60 turns #24 magnet wire on Micrometals E75-26 "E" core

L_2 - 10 turns #18 magnet wire on 0.6 cm air core

o — bottom foil connection

● — top ground plane connection

TOP VIEW

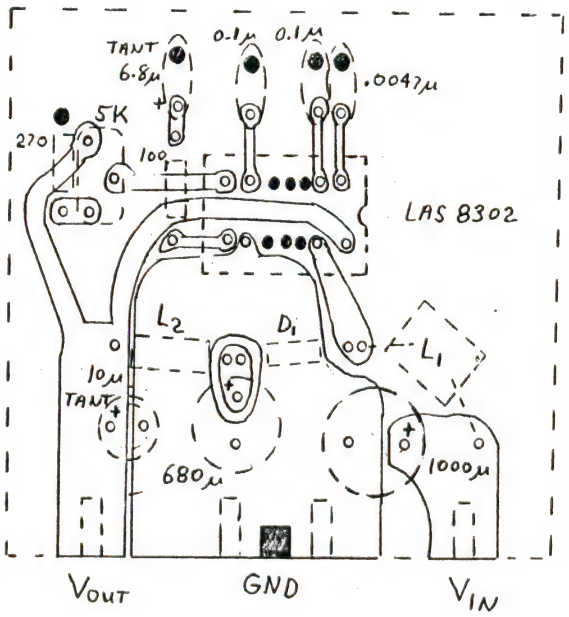

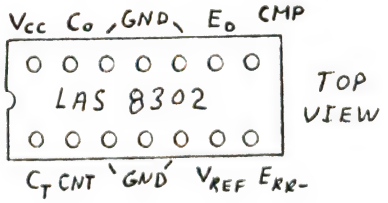

TOP VIEW

PAL/SECAM CONVERTER - YVETTE

ESTIMATED MATERIAL COST DETAIL

BUILT IN TAIWAN

November 15, 1983

PART NUMBER	DESCRIPTION	OPTIMISTIC TAIWAN UNIT COST	OPTIMISTIC TAIWAN EXT. COST	QTY.	PESSIMISTIC TAIWAN EXT. COST	PESSIMISTIC TAIWAN UNIT COST
	PRINTED CIRCUIT BOARD					
		0	0	1	0.00	0.00
			0.00		0.00	
	INTEGRATED CIRCUITS					
	TDA3571B	0	0	1	0	0
	TDA3510	0	0	1	0	0
	4013B	0	0	1	0	0
	MC1376 (VCO)	0	0	1	0	0
	4066B	0	0	1	0	0
			0.00		0.00	
	DISCRETE COMPONENTS					
	CAP CER AX 18PF	0	0	1	0	0
	CAP CER AX 47PF	0	0	1	0	0
	CAP CER AX 56PF	0	0	1	0	0
	CAP CER AX 120PF	0	0	2	0	0
	CAP CER AX 150PF	0	0	1	0	0
	CAP CER AX 470PF	0	0	2	0	0
	CAP CER AX .001UF	0	0	2	0	0
	CAP CER AX .01UF	0	0	5	0	0
	CAP CER AX .1UF	0	0	7	0	0
	CAP MICA RADIAL .0027UF, 1%	0	0	1	0	0
	CAP MYLAR RADIAL .015UF	0	0	1	0	0
	CAP MYLAR RADIAL .047UF	0	0	1	0	0
	CAP MYLAR RADIAL .33UF	0	0	2	0	0
	CAP MYLAR RADIAL .47UF	0	0	1	0	0
	CAP ELECTROLYTIC 1UF	0	0	5	0	0
	CAP ELECTROLYTIC 2.2UF	0	0	3	0	0
	CAP ELECTROLYTIC 4.7UF	0	0	2	0	0
	CAP ELECTROLYTIC 10UF	0	0	7	0	0
	CAP ELECTROLYTIC 15UF, 16V	0	0	1	0	0
	CAP ELECTROLYTIC 22UF	0	0	1	0	0
	CAP ELECTROLYTIC 47UF, 15V	0	0	3	0	0
	CAP ELECTROLYTIC 100UF	0	0	2	0	0
	CAP ELECTROLYTIC 470UF	0	0	1	0	0

PART NUMBER	DESCRIPTION	OPTIMISTIC TAIWAN UNIT COST	OPTIMISTIC TAIWAN EXT. COST	QTY.	PESSIMISTIC TAIWAN EXT. COST	PESSIMISTIC TAIWAN UNIT COST
	DISCRETE COMPONENTS (CONT)					
	CAP ELECTROLYTIC 1000UF		0	1	0	
	CAP ELECTROLYTIC 2000UF, 25V		0	1	0	
	CAP CER VARIABLE 15-50PF		0	1	0	
	RESISTORS 1.2 - 680K OHM, 1/4W, 5%		0	66	0	
	REGULATOR, LAS8302, 12V		0	1	0	
	REGULATOR, 78M05, 5V		0	1	0	
	POTENTIOMETER, 500K OHM		0	3	0	
	POTENTIOMETER, 1K OHM		0	1	0	
	POTENTIOMETER, 5K OHM		0	1	0	
	INDUCTOR, 3UH VARIABLE		0	2	0	
	INDUCTOR, 10UH VARIABLE		0	4	0	
	INDUCTOR, 1.0UH VARIABLE		0	1	0	
	INDUCTOR, USEC DELAY		0	1	0	
	INDUCTOR, 85UH		0	1	0	
	TRANSISTOR, 2N3904		0	6	0	
	TRANSISTOR, 2N3906		0	3	0	
	CRYSTAL, 8.8 MHZ		0	1	0	
	CRYSTAL, USEC DELAY		0	1	0	
	DIODE, 1N4005		0	5	0	
	DIODE, 1N914		0	34	0	
	DIODE, ZENER, 1N5234B		0	1	0	
	L.E.D.		0	1	0	
			0.00		0.00	
	CABLES & CONNECTORS					
	SOCKET, I.C., 8-PIN		0	1	0	
	SOCKET, I.C., 14-PIN		0	5	0	
	SOCKET, I.C., 18-PIN		0	1	0	
	SOCKET, I.C., 24-PIN		0	1	0	
			0.00		0.00	

PAL/SECAM CONVERTER

- DECODES PAL TO B-Y, R-Y; ENCODES TO SECAM
- NO SPECIFICATION EXISTS OTHER THAN VIDEO IN/OUT SPECIFICATIONS

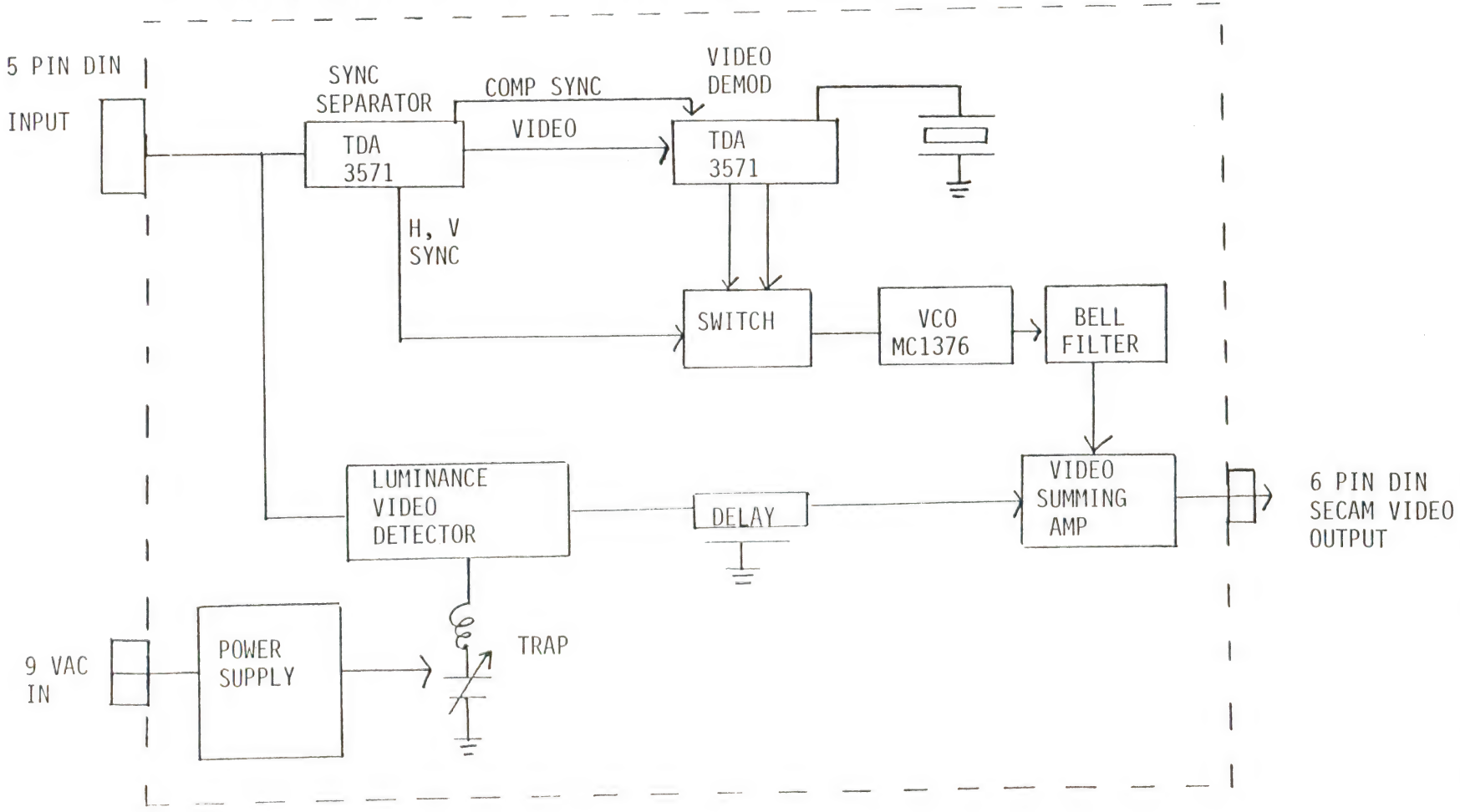

P A L / S E C A M C O N V E R T E R

MAJOR ISSUES/CONCERNS

- CIRCUIT PROTOTYPE NOT YET OPERATIONAL
  - DELAYS IN GETTING PARTS
  - CONSULTANT RESPONSIBLE FOR DESIGN LEAVING 30 NOV. 83
    * HAS ASSURED ATARI THAT DESIGN WILL BE COMPLETE

- CASE
  - MADE TO FIT INTO 850 TOP AND BOTTOM PLASTIC
  - STYLING MAY NOT BE ACCEPTABLE TO MARKETING
    (PCB WILL FIT IN 850 CASE)

- SCHEDULE
  - 12 WEEKS DELIVERY ON VCO MC1376
  - 16 WEEKS ON SMALL QUANTITIES TDA3510, TDA3571

- COST OF MATERIALS
  - INITIAL MATERIAL ESTIMATE $12.00
  - CURRENT ESTIMATE $_____

- SIMILAR PRODUCTS SELL FOR $1000 - $3000 (NEAR BROADCAST QUALITY)

PAL/SECAM CONVERTER

- MANUFACTURABILITY
  - COMPONENTS CONCERNED ABOUT # OF TUNED CIRCUITS AND DRIFT STABILITY
- THE PAL/SECAM CONVERTER WILL ONLY WORK WITH ATARI PRODUCTS

  8,90 MHz ATARI

  8,87 MHZ EUROPEAN BROADCAST UNION
  - MAY NOT WORK WITH IBM OR ANY OTHER VCR ETC.

OPEN ISSUE

- COULD THE ATARI XTAL BE CHANGED TO GET ATARI FREQUENCY TO 8,87 MHz INSTEAD OF 8,90 MHz

600XL SECAM COMPUTER

BASE
MACHINE

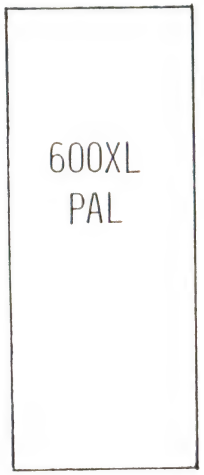

ADDITIONS

1. FGTIA (50¢ MORE COST THAN PAL GTIA)
2. SECAM COLOR SWITCHING CIRCUITRY
3. SECAM BELL FILTER
4. 6 PIN DIN CONNECTOR
5. EXTERNAL MODULATOR *(OPTION) ($5-$12)
6. 6 PIN DIN TO PERITEL CABLE ($8.00)

DELETIONS

1. PAL GTIA
2. 5 PIN DIN CONNECTOR
3. MISC PAL VIDEO SUMMING CIRCUITS
4. PAL MODULATOR

TOTAL ADDITIONS: 4 1/2 ICs PLUS 20 DISCRETE COMPONENTS

* USEFUL TO ONLY 10% OF CUSTOMERS
(TVs PRIOR TO 1980)

600XL SECAM COMPUTER

MAJOR ISSUES/CONCERNS

- SCHEDULE: PRODUCTION START PRESENTLY SET FOR 3/31/84
  - IS THIS ACCEPTABLE TO MARKETING
- BOARD SPACE MIGHT BE TOO SMALL FOR ALL COMPONENTS
  - RESISTOR SIPS CAN BE USED TO ASSURE ROOM
  - DAUGHTER BOARD COULD BE USED
- FGTIA RISK
  - 2ND REVISION AVAILABLE 12/2/83
- COMPONENTS MAY BE CONCERNED ABOUT SOURCING ON 6 PIN DIN
- DOES INTERNATIONAL WANT 600XL SECAM PRODUCT
- EXTERNAL MODULATOR COULD BE ON CRITICAL PATH
  - NO SOURCE EXISTS TO ACCEPT 1 VP-P VIDEO

800XL SECAM COMPUTER

CHANGES OF SAME NATURE AS 600XL, EXCEPT THAT NO BOARD LAYOUT PROBLEM SHOULD EXIST

COMPARISON OF 600XL SECAM TO PAL/SECAM

1. VIDEO OUTPUT OF 600XL SECAM COMPUTER WILL HAVE BETTER PERCEIVED QUALITY THAN PAL/SECAM CONVERTER

   - MORE VIDEO NOISE IN PAL/SECAM CONVERTER

2. COST OF 600XL FAR LESS THAN PAL/SECAM CONVERTER

3. PAL/SECAM CONVERTER NEEDS EXTERNAL MODULATOR, BUT COULD INCLUDE MODULATOR AT HIGHER COST

PAL-BG 600XL

ESTIMATED MATERIAL COST DETAIL

BUILT IN TAIWAN

November 16, 1983

PART NUMBER	DESCRIPTION	OPTIMISTIC TAIWAN UNIT COST	OPTIMISTIC TAIWAN EXT. COST	QTY.	PESSIMISTIC TAIWAN EXT. COST	PESSIMISTIC TAIWAN UNIT COST
	PRINTED CIRCUIT BOARD					
C061677	P.C.B., MAIN BOARD	7.00	7.00	1	7.50	7.50
			7.00		7.50	
	INTEGRATED CIRCUITS					
C061813	MMU	2.75	2.75	1	2.95	2.95
C061593	27128	4.60	4.60	1	5.00	5.00
C060502	BASIC ROM 8K X 8	2.70	2.70	1	3.10	3.10
C014743	74LS158	.26	.52	2	0.60	0.30
C017097	74L303	.18	.18	1	0.20	0.20
C061702	LM358 DUAL OP AMP	.18	.18	1	.22	.22
C021698-01	ANTIC "B"	3.10	3.10	1	3.30	3.30
C014806	CPU, SALLY	2.90	2.90	1	3.10	3.10
C061505	16K X 4 RAM	4.25	8.50	2	9.50	4.75
C060472	DELAY LINE	2.70	2.70	1	2.90	2.90
C060613	74LS375	.28	.28	1	.34	.34
C060474	74LS51	.22	.22	1	.26	.26
C061622	74S32	0.20	0.20	1	.24	.24
C010816	CD4050B	.16	.16	1	0.20	0.20
C012294	POKEY	2.00	2.00	1	2.40	2.40
C014795	PIA	1.75	1.75	1	1.85	1.85
C014336	CD4051	.26	.52	2	0.60	0.30
C061850	74LS14	.22	.22	1	.26	.26
C061428	74LS138	.26	.26	1	0.30	0.30
C014805	GTIA, CUSTOM	2.30	2.30	1	2.50	2.50
C016045	74L374	.22	.22	1	.26	.26
			36.26		40.05	
	DISCRETE COMPONENTS					
C014178-01	CAP CER AX 33PF, +-10%	.011	.011	1	.013	.013
C014178-11	CAP CER AX 68PF, +-10%	.011	.011	1	.013	.013
C014178-14	CAP CER AX 56PF, +-5%	.011	.011	1	.013	.013
C014178-19	CAP CER AX 100PF, +-5%	.02	.04	2	.05	.025
C014180-05	CAP CER AX 220PF, +-10%	.07	.07	1	.076	.076
C014180-09	CAP CER AX .047UF, +-5%	.055	.385	7	.42	.06
C014181-01	CAP CER AX .001UF, +80-20%	.009	.36	40	.44	.011

PART NUMBER	DESCRIPTION	OPTIMISTIC TAIWAN UNIT COST	OPTIMISTIC TAIWAN EXT. COST	QTY.	PESSIMISTIC TAIWAN EXT. COST	PESSIMISTIC TAIWAN UNIT COST
	DISCRETE COMPONENTS (CONT)					
C014181-02	CAP CER AX .01UF, +80-20%	.015	.06	4	.072	.018
C014181-03	CAP CER AX .1UF, +80-20%	.034	1.122	33	1.254	.038
2A-028	CAP CER DISC RADIAL 180PF	.007	.007	1	.009	.009
C061336-01	CAP CER AX 3.9PF, +-10%	.011	.011	1	.013	.013
C061336-03	CAP CER AX 820PF, +-10%	.069	.069	1	.075	.075
C061647	CAP RADIAL NON-POLARIZED 4.7UF, 35V	.04	.12	3	.18	.06
C014392	CAP ELECTROLYTIC RADIAL 10UF, 16V	.03	.09	3	.135	.045
C014393	CAP ELECTROLYTIC AX 22UF, 16V	.04	.16	4	.18	.045
24-100476	CAP ELECTROLYTIC AX 47UF, 10V	.036	.036	1	.04	.04
C014370	CAP ELECTROLYTIC AX 470UF, 35V	.085	.17	2	.19	.095
VARIOUS	RESISTORS 1 - 750K OHM, 1/4W, 5%	.0034	.374	110	.55	.005
C060607	DIODE, 1N4148	.012	.048	4	.06	.015
C014776	LED PILOT LAMP	.03	.03	1	.04	.04
C014384	INDUCTOR, FERRITE BEAD	.013	.091	7	.105	.015
C014381	INDUCTOR, AXIAL, 10UH, +-5%	.04	.04	1	.045	.045
C014380	INDUCTOR, AXIAL, 22UH, +-10%	.035	.035	1	.045	.045
C017248-04	INDUCTOR, AXIAL, 100UH, +-10%	.04	.04	1	.045	.045
C017248-03	INDUCTOR, AXIAL, 820UH, +-10%	.04	.08	2	.09	.045
C017222	INDUCTOR, AXIAL, 1.5UH, +-5%	.065	.065	1	.075	.075
34-2N3904	TRANSISTOR, 2N3904	.032	.192	6	.216	.036
33-2N3906	TRANSISTOR, 2N3906	.032	.064	2	.072	.036
C014809	TRANSISTOR, MPSA55	.065	.065	1	.075	.075
C016112	CRYSTAL 3.546894 MHZ	0.40	0.40	1	0.50	0.50
C016801	CRYSTAL 4.433618 MHZ	0.40	0.40	1	0.50	0.50
19-411504	TRIMPOT, 500K OHMS	.078	.078	1	.08	.08
C061658	R.F. MODULATOR, PAL-B	2.00	2.00	1	2.50	2.50
			6.74		8.17	
	CABLES & CONNECTORS					
C014388	CONNECTOR, 5-PIN	.18	.18	1	.22	.22
C061838	CONNECTOR, 7-PIN, POWER	.18	.18	1	.22	.22
C010448	CONNECTOR, 9-PIN, RT. ANGLE	.19	.38	2	.46	.23
C012995	CONNECTOR, 13-PIN, RT. ANGLE	.31	.31	1	.37	.37
C061793	CONNECTOR, 24-PIN, KEYBOARD	.15	.15	1	0.20	0.20
C014389	CONNECTOR, 30-PIN, CARTRIDGE	0.70	0.70	1	.77	.77
T.B.D.	CABLE, 2 FT, W/5-PIN CONNECTORS	0.90	0.90	1	1.20	1.20
T.B.D.	CABLE, PERI-TEL, 6 FT	3.50	3.50	1	4.50	4.50
C014386-01	SOCKET, I.C., 8-PIN	.035	.035	1	.04	.04
C014386-02	SOCKET, I.C., 14-PIN	.04	0.20	5	.225	.045
C014386-03	SOCKET, I.C., 16-PIN	.045	.315	7	.35	.05
C014386-04	SOCKET, I.C., 18-PIN	.05	0.10	2	.11	.055
C014386-05	SOCKET, I.C., 20-PIN	.055	.055	1	.06	.06
C014386-07	SOCKET, I.C., 24-PIN	.06	.06	1	.07	.07
C014386-08	SOCKET, I.C., 28-PIN	.07	.07	1	.08	.08
C014386-09	SOCKET, I.C., 40-PIN	0.10	0.50	5	0.60	.12
			7.64		9.48	

PART NUMBER	DESCRIPTION	OPTIMISTIC TAIWAN UNIT COST	OPTIMISTIC TAIWAN EXT. COST	QTY.	PESSIMISTIC TAIWAN EXT. COST	PESSIMISTIC TAIWAN UNIT COST
	SWITCHES					
C061022	SWITCH, POWER, ROCKER VERTICAL	1.10	1.10	1	1.20	1.20
C019702-01	SWITCH, CHANNEL	.065	.065	1	.075	.075
			1.17		1.28	
	HARDWARE					
C061999	RF SHIELD TOP	.45	.45	1	.55	.55
C062000	RF SHIELD BOTTOM	0.30	0.30	1	0.40	0.40
C017116-10	SCREW	.003	.036	12	.06	.005
C062055	NYLON RIVET	.008	.048	6	.09	.015
C010389	TOROID CORE	.12	.12	1	.15	.15
88-1004	RUBBER FEET	.005	.02	4	.04	.01
C014069	L.E.D. STANDOFF	.005	.005	1	.01	.01
			0.98		1.30	
	PCB SUB-TOTAL		59.77		67.30	
	PLASTIC & MECHANICAL					
C061198	TOP HOUSING	0.50	0.50	1	.65	.65
C061199	BOTTOM HOUSING	0.80	0.80	1	0.90	0.90
C062146	KEYBOARD MASK	.75	.75	1	.85	.85
T.B.D.	INDICATOR STRIP	.03	.03	1	.04	.04
C062145	NAMEPLATE	.07	.07	1	.12	.12
C060297	CARTRIDGE GUIDE	.24	.24	1	.28	.28
C062001	LOWER SHIELD INSULATOR	.08	.08	1	.09	.09
T.B.D.	GROUND STRAP	0.10	0.10	1	.12	.12
			2.57		3.05	
C4061987	KEYBOARD	9.20	9.20	1	9.85	9.85
C060852-11	POWER ADAPTOR	8.00	8.00	1	8.20	8.20
			17.20		18.05	
	TOTAL MATERIAL COST		79.54		88.90	

P/N:	REV.		TITLE: MODEL NO.

SYM.	REVISION	DATE	APPROVED

ATARI®

ATARI INCORPORATED
1265 BORREGAS AVE.
SUNNYVALE, CALIF. 94086

DASH NO.	MANUFACTURER	PRODUCT VERSION BUILD LOCATION	MARKET

P/N:

SHEET 1 OF ___

ITEM NO.	PART NUMBER	DESCRIPTION	QTY. REQUIRED PER VERSION									
1		RESISTORS										
2	14-5330	33 Ω		1			R48					
3	14-5473	47 Ω , 1/4W, 5%		1			R10					
4	14-5680	68 Ω		1			R68					
5	14-5820	82 Ω		1			R14					
6	14-5910	91 Ω		1			R41					
7	14-5101	100 Ω		4			R10	20	23	29		
8	14-5181	180 Ω		1			R40					
9	14-5391	390 Ω		2			R53	60				
10	14-5511	510 Ω		2			R67	71				
11	14-5561	560 Ω		3			R26	42	63			
12	14-5681	680 Ω		2			R24	55				
13	14-5102	1K Ω		14			R4-6	12	15	19	35	36
14							39	45	46	56	69	22
15	14-5122	1.2K Ω		3			R25	31	34			
16	14-5152	1.5K Ω		3			R43	62	66			
17	14-5182	1.8K Ω		1			R32					
18	14-5222	2.2K Ω		2			R18	27				
19	14-5272	2.7K Ω		1			R52					
20	14-5332	3.3K Ω		4			R30	59	61	65		
21	14-5392	3.9K Ω		1			R64					
22	14-5472	4.7K Ω		2			R11	58				
23	14-5562	5.6K Ω		1			R13					
24	14-5682	6.8K Ω		1			R54					
25	14-5822	8.2K Ω		1			R38					
26	14-5103	10K Ω		7			R2	3	7	44	47	50
27							51					
28	14-5183	18K Ω		1			R9					
29	14-5273	27K Ω		1			R57					
30	14-5333	33K Ω		2			R17	49				
31	14-5683	68K Ω		1			R21					
32	14-5823	82K Ω		1			R16					
33												
34		POTENTIOMETER										
35	C0179494-01	500 Ω		18			R28	33	70			
36	C0179494-01	1K Ω		1			R37					
37	C0179494-01	5K Ω		12			R8					
38												
39		CAPACITORS, CERAMIC AXIAL										
40	C0141791-13	.001 uf, 250		2			C9	34				
41	C0141791-02	.01 uf		5			C14	21	36	44	46	
42	C0141791-14	.1 uf		42			C1	10	31	33		
43							CU2	4	7			
44	C0141791-15	18 pf, X7R		1			C50					
45	C0141791-09	47 pf		1			C43					
46	C0141791-16	56 pf		1			C49					
47	C0141811-01	120 pf		2			C42	45				
48	C0141811-02	150 pf		1			C17					

BISHOP GRAPHICS/ACCUPRESS
REORDER NO. A22858

P/N:	REV.		TITLE:
			MODEL NO.

SYM.	REVISION	DATE	APPROVED

ATARI®

ATARI INCORPORATED
1265 BORREGAS AVE.
SUNNYVALE, CALIF. 94086

DASH NO.	MANUFACTURER	PRODUCT VERSION BUILD LOCATION	MARKET

P/N:

SHEET 1 OF ___

ITEM NO.	PART NUMBER	DESCRIPTION	QTY. REQUIRED PER VERSION	
1		CAPACITORS, CERAMIC AXIAL (cont.)		
2	C0141181-03	470 pf	2	C48 53
3				
4	21-101721	CAP, MICA RADIAL, .0027 uf, 1%	7	C12
5				
6		CAP, MYLAR RADIAL		
7	C0176970	.015 uf	1	C4
8	TBD	.047 uf	1	C16
9	TBD	.33 uf	2	C27 29
10	21-101474M	.47 uf	1	C18
11				
12		CAP, ELECTROLYTIC		
13	C0147730	1 uf	40	C5 26 37 40 41
14	TBD	2.2 uf	3	C23 28 38
15	C0103360	4.7 uf	2	C15 39 35
16	C0143920	10 uf	7	C6-8 20 22 24 47
17	TBD	15 uf, 16v	1	C32
18	C0143930	22 uf	6	C25
19	24-100476	47 uf, 15v	12	C3 13 19
20	C0103400	100 uf	16	C11 51
21	C0143700	470 uf	12	C52
22	C0155180	1000 uf	16	C54
23	C0143730	2000 uf, 25v	1	C2
24				
25	C0165470	CAP, CERAMIC VARIABLE, 15-50 pf	7	C30
26				
27		INDUCTORS		
28	C0108230	3 uH variable	8	L1 6
29	C0108230	10 uH variable	8	L4 5
30	C0108230	1.0 uH	1	L9
31	TBD	10 uH variable	2	L2 3
32	TBD	140 usec delay	1	L7
33	C0179480-04	85 uH	1	L8
34				
35		DIODES		
36	31-1N4002	1N4005	40	CR1-5
37	31-1N914	1N914	1	CR6 8 9
38	C0148080-01	6.2v ZENER 1N5234B	4	CR7
39	C0147760	L.E.D.	6	CR10
40				
41		TRANSISTORS		
42	34-2N3904	2N3904	6	Q1-6
43	33-2N3906	2N3906	3	Q7-9
44				
45		CRYSTALS		
46	TBD	8.8 MHz	6	Y1
47	TBD	64 usec delay	6	Y2
48				

BISHOP GRAPHICS/ACCUPRESS
REORDER NO. A22858

P/N:	REV.		TITLE: MODEL NO.

SYM.	REVISION	DATE	APPROVED

ATARI®

ATARI INCORPORATED
1265 BORREGAS AVE.
SUNNYVALE, CALIF. 94086

DASH NO.	MANUFACTURER	PRODUCT VERSION BUILD LOCATION	MARKET

P/N:

SHEET 1 OF ___

ITEM NO.	PART NUMBER	DESCRIPTION	QTY. REQUIRED PER VERSION
1		I.C.'s	
2	TBD	TDA3571B	1 U1
3	TBD	TDA3510	1 U3
4	C0141334	4013B	9 U2
5	TBD	MC1376 (VCO)	1 U4
6		12v sw. reg. LAS8302	1 U5
7	C0108190	78M05 (5v regulator)	10 U6
8	C0114641-01	4066B	9 U7
9	C0143861-01	8-PIN DIP socket	6 XU4
10	C0143862-02	14-PIN DIP socket	18 XU2 5 7
11	C0143864-04	18-PIN	6 XU1
12	C0143867-07	24-PIN	6 XU3
13			
14			
15			
16			
17			
18			
19			
20			
21			
22			
23			
24			
25			
26			
27			
28			
29			
30			
31			
32			
33			
34			
35			
36			
37			
38			
39			
40			
41			
42			
43			
44			
45			
46			
47			
48			

BISHOP GRAPHICS/ACCUPRESS
REORDER NO. A22858